01 Can be coupled with TAB 6.3x0.8 mm DIN 46244 and with female terminal 6.3x0.8 DIN 46247

02 Crimping copper wire section: 0.75–2.0 (1+1) m²
Insulation diameter: 2.2–3.7 mm
Crimping with flag mini-applicator AT750311363B

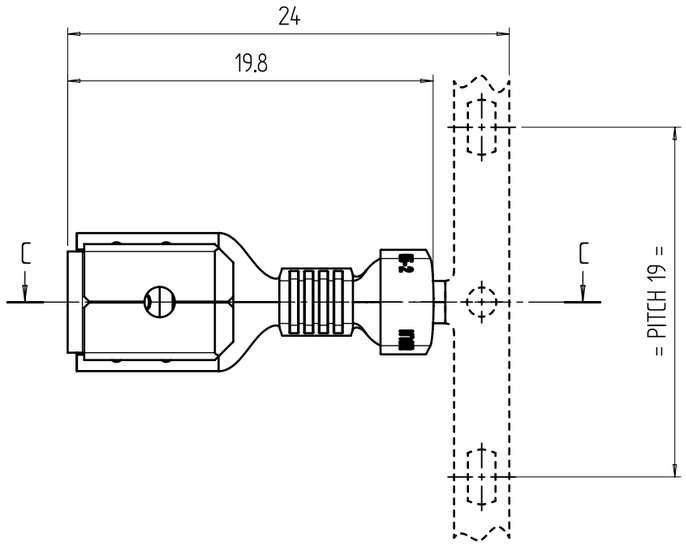

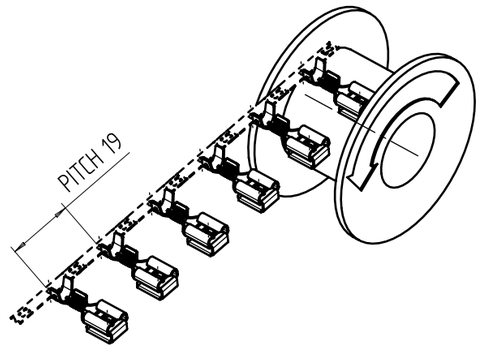

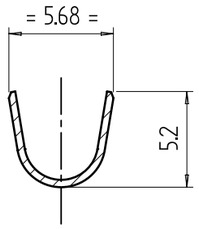

SECTION B–B

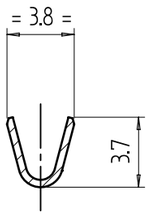

SECTION A–A

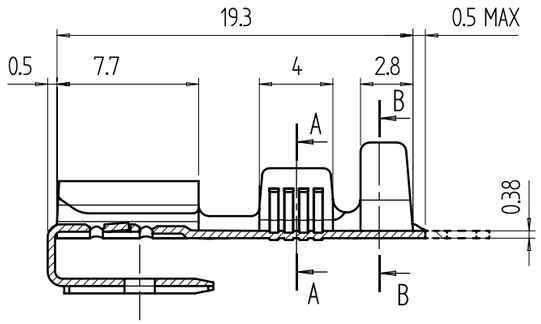

SECTION C–C

0211363121	Fe	Ni	
0911363001	CuNiZn	–	
0011363001	CuZn	–	cULus
0111363001	CuSn	–	
0111363101	CuSn	Pre-Tinned	
0011363101	CuZn	Pre-Tinned	cURus – VDE
CODE	MATERIAL	SURFACE FINISH	VALIDATION

CUSTOMER DRAWING

UNLESS OTHERWISE SPECIFIED ALL DIMENSIONS IN MM GENERAL TOLERANCES		DRAWING N° PL11363	NAME PIGGY-BACK TERMINAL 6.3X0.8 WIRE RANGE 0.75-2.0 (1+1)			inarca
LINEAR	±0.2mm	VERSION 15	MATERIAL SEE TABLE		DRF.	DT.
ANGULAR		PROJECT	FINISH SEE TABLE		APP. P.TONIOLO	DT. 13/05/2024
NON DIMENSIONED EDGES		PRODUCT SPECIFICATION 011006301800	SIZE A3	SCALE 3:1 / SHEET 1 OF 1	PRD. P.TONIOLO	DT. 13/05/2024
SURFACE ROUGHNESS					FRZ.	DT.

INARCA S.P.A. PADOVA ITALY ACCORDING TO THE LAW RESERVES THE RIGHT OF PROPERTY OF THE PRESENT DRAWING AND ITS REPRODUCTION AND/OR TRANSMISSION WITHOUT EXPRESS AUTHORIZATION BY THE COMPANY IS FORBIDDEN